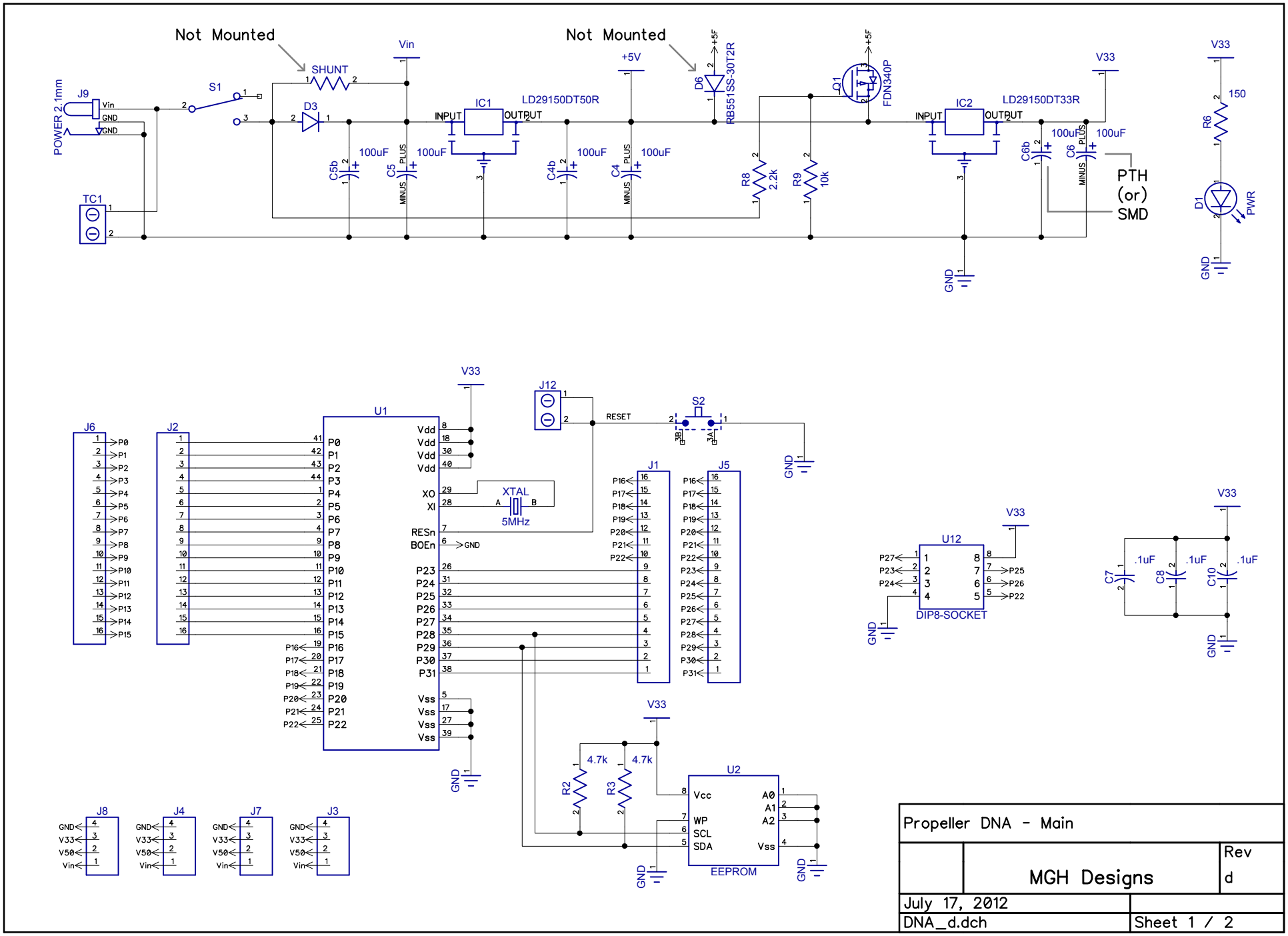

Propeller DNA - Main		
	MGH Designs	Rev d
July 17, 2012		
DNA_d.dch		Sheet 1 / 2

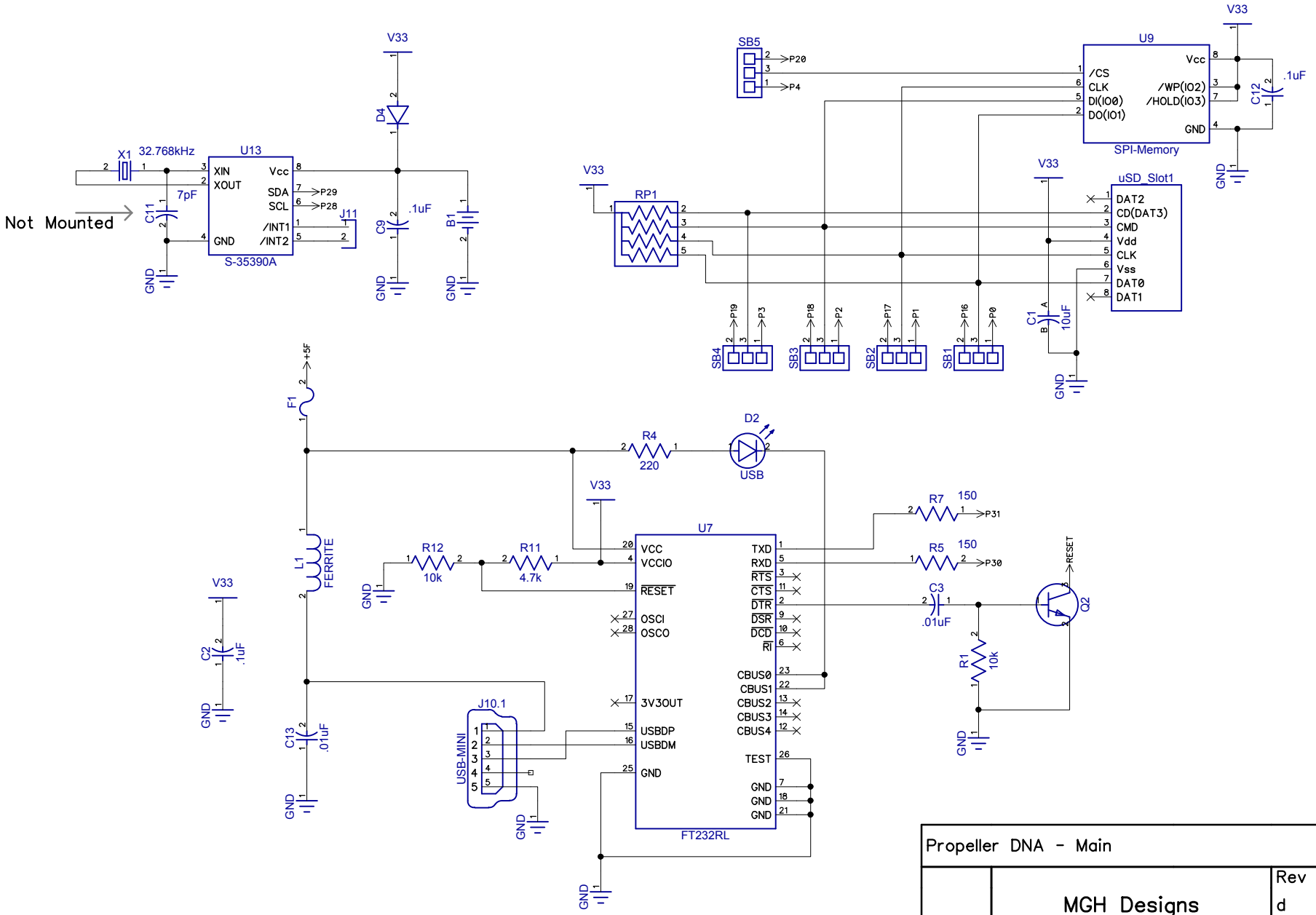

Propeller DNA - Main		
	MGH Designs	Rev d
July 17, 2012		
DNA_d.dch		Sheet 2 / 2